# TECHNICAL DATA SHEET

KITCHEN SINK MODEL: **MANHATTAN D-150L** | SERIES: **TOPMOUNT** | SINK MATERIAL **GRANITE**

## PRODUCT INFORMATION

| | |
|---|---|
| ITEM: | MANHATTAN D-150L |
| DIMENSIONS: | 1000 X 500 MM |
| TOP MOUNT CUT OUT: | 980 X 490 MM |
| BOWL DEPTH: | 200 MM |
| INSTALLATION TYPE: | TOPMOUNT |
| MATERIAL: | GRANITE |
| PACKAGING: | CARTON BOX |

## INSTALLATION DIAGRAM

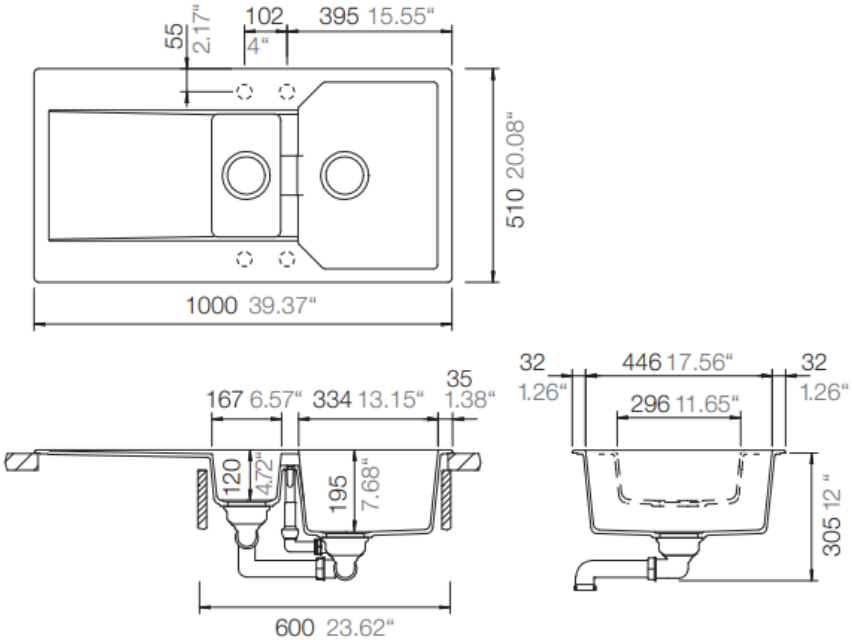


## INCLUSIONS:

*INCLUDES WASTE FITTING, BOTTLE TRAP, AI*